TANK METER KIT FOR FUEL AND DRINKING WATER: 834399

AQ200D, AQ200F

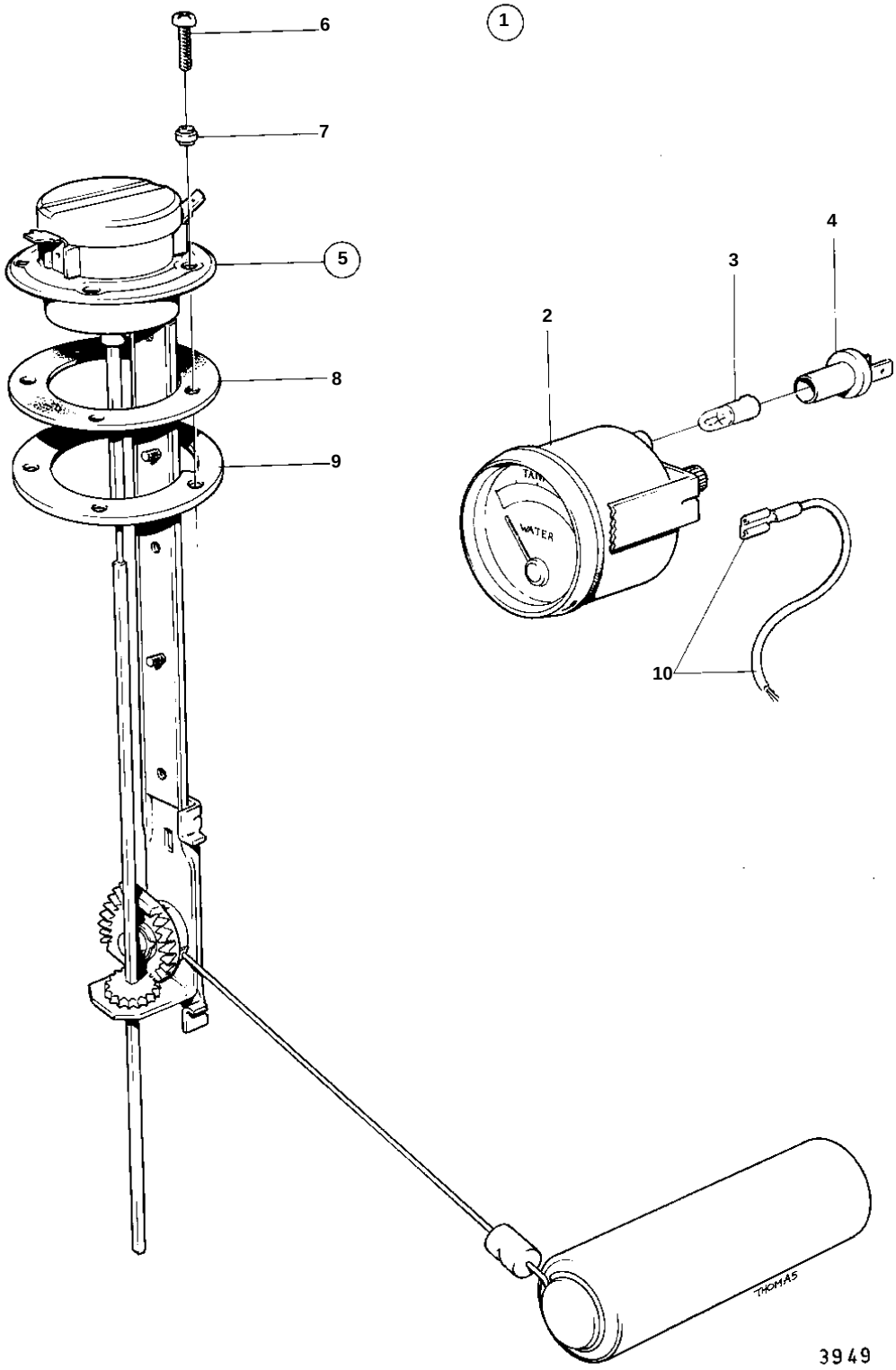

AQ200D, AQ200F

REF	PART NO.	QTY	DESCRIPTION	NOTES
1		1	Tank gauge	FOR SHAFT DIAM. 45MM.
2		1	· Tank gauge	
3	19923	1	· Bulb	
4	808175	1	· Lamp socket	
5	837999	1	· Sensor	
6	956078	4	· · Cross recessed screw	L = 16 MM
	956081	1	· · Cross recessed screw	L = 25 MM
7	834481	5	· · Gasket	
8	89865	1	· · Gasket	
9	834480	1	· · Flange	
10		X	CABLES AND CABLE TERMINALS	SEE GROUP 3